Articulated Risers

Features and Benefits:

- During installation the top of the sprinkler can be easily adjusted to the height of the topsoil.
- The Articulated Riser works well around obstacles and can be swivelled about to the correct position.
- The sprinkler will tend to be more flexible and can be easily readjusted when run over with heavy rolling equipment or the wheel of a car or mower.
- When turf is top-dressed or if the soil sinks, the sprinkler can be quickly raised or lowered without digging up the laterals.
- If your pipes are buried in shallow trenches the Articulated Riser allows you to retrofit a taller pop-up sprinkler to suit your changing requirements.
- The whole sprinkler can be pulled above the ground level for sprinkler maintenance to prevent dirt form entering the pipework.

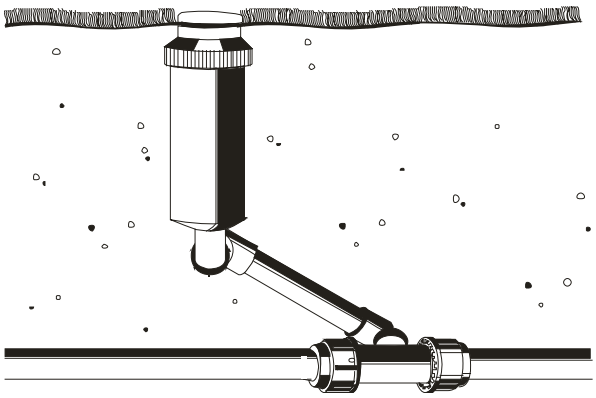

¾" Articulated Riser with gear-drive pop-up sprinkler, installed using tee connector compression fittings.

Specifications:

Thread Size.....½" or ¾" BSP Male
Maximum Pressure Rating .....1500kPa for ½" size
1650kPa for ¾" size
Overall Length.....Approx. 20cm
Material.....Polypropylene

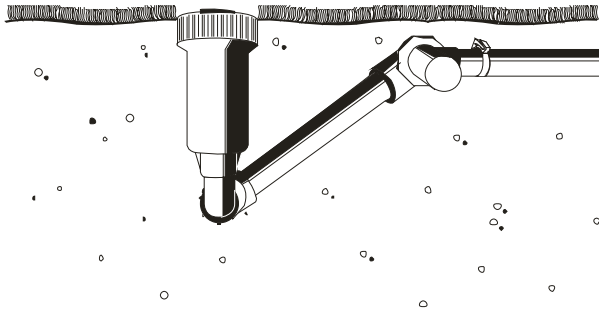

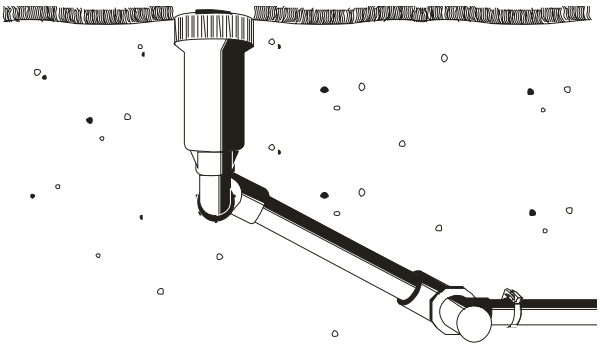

½" Articulated Riser with pop-up sprinkler installed with barbed elbow showing adjustability of the riser

AUSTRALIA – PPI Corporation Pty Ltd (ABN 79 010 656 005)

QLD Sales Office	**Ph: (07) 3865 2300**	Fax: (07) 3857 0058
Townsville Sales Office	**Ph: (07) 4779 7322**	Fax: (07) 4779 2509
NSW Sales Office	**Ph: (02) 8706 3200**	Fax: (02) 8706 2499
VIC Sales Office	**Ph: (03) 9791 3700**	Fax: (03) 9791 3900
SA Sales Office	**Ph: (08) 8447 2611**	Fax: (08) 8447 8117
TAS Sales Office	**Ph: (03) 6248 5933**	Fax: (03) 6248 5988
WA Sales Office	**Ph: (08) 9212 3200**	Fax: (08) 9355 0675
NT Agent Territory Hardware	**Ph: (08) 8947 1250**	Fax: (08) 8984 4461

EXPORT ENQUIRIES Ph: +61 7 3865 3699 Fax: +61 7 3857 0058

NEW ZEALAND – PPI Corporation (NZ) Limited
Christchurch Ph: (03) 313 7956 Fax: (03) 313 5551

EMAIL: sales@ppi.com.au
WEB: www.ppi.com.au

Date: 2nd March 2007
Code: ZM/LT3MTATRI